Product Sheet

## Description

ZED#2101932SB8MI

Designer: Riccardo Giovanetti

Zed represents a family of products designed to organize the outdoor space according to multiple areas dedicated to different functions. Zed is a partition system consisting of a supporting structure in extruded aluminum, completed by painted steel bases. The aluminum frame allows the insertion of a wide range of outdoor fabrics. Zed is divided into a wide range of accessories: acoustic panels, coat hangers, signs, vases and plant holders make the collection extremely versatile.

## Drawings

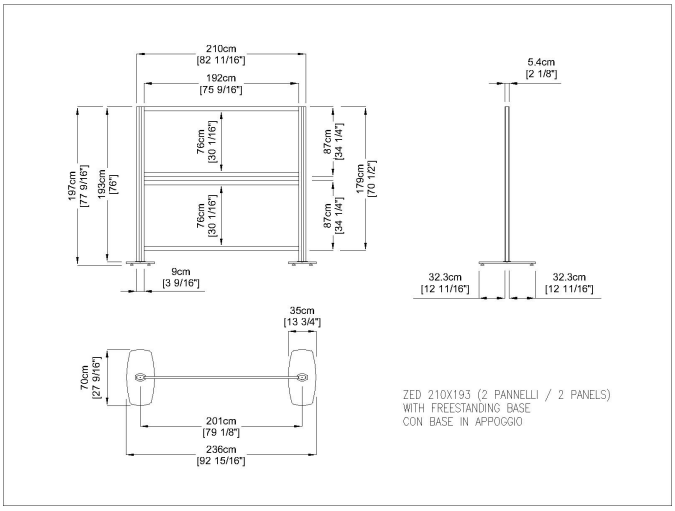


Divider
210 x 193

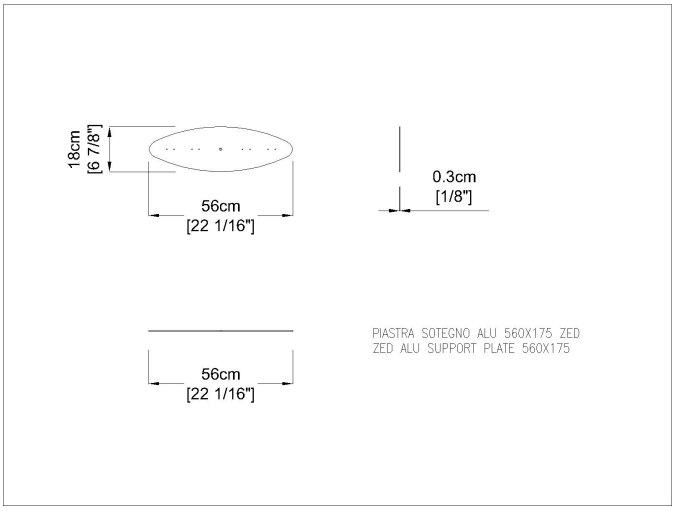


Plant Holder
56 x 18

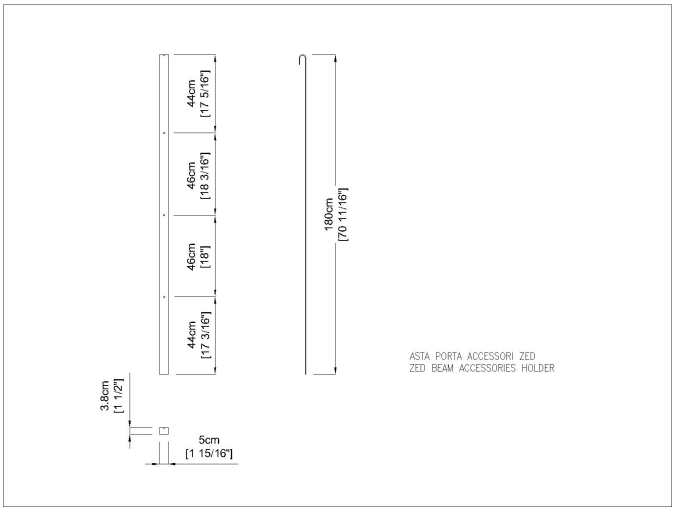


Vertical metal rods
3 types

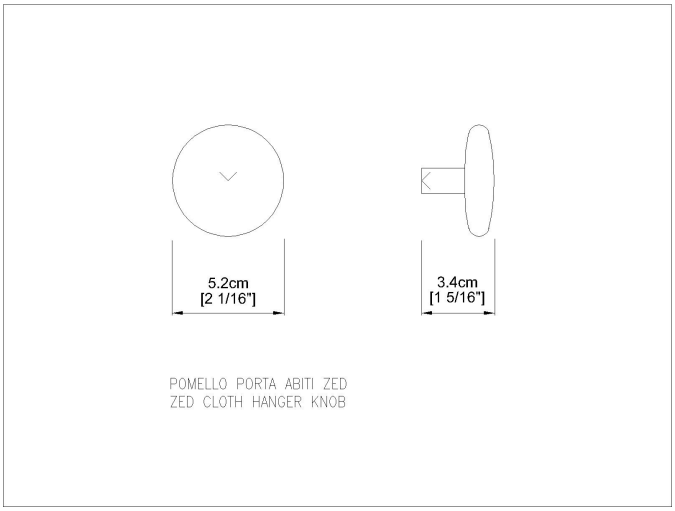


Hanger Knob
5 x 3

# Product Sheet

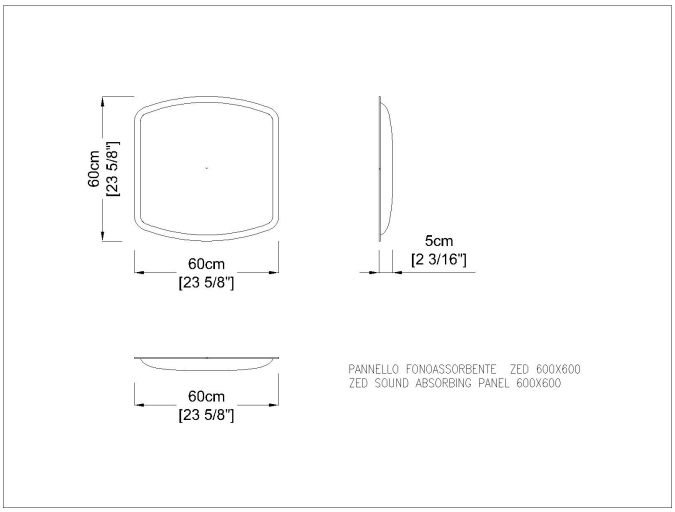


Acoustic Panel
60 x 60

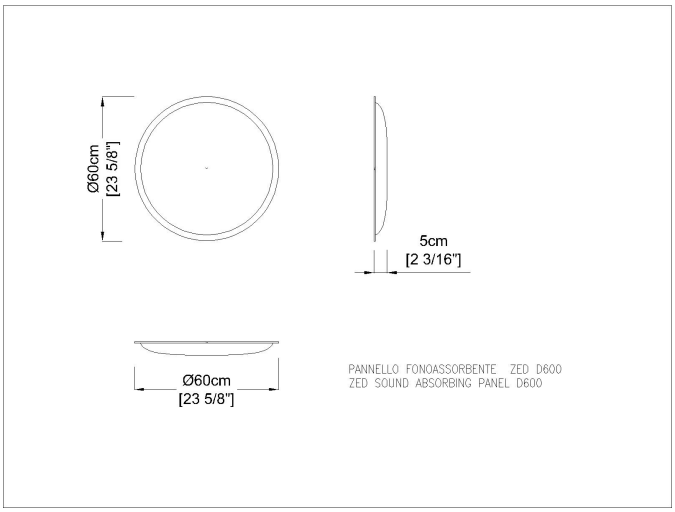


Acoustic Panel
D60

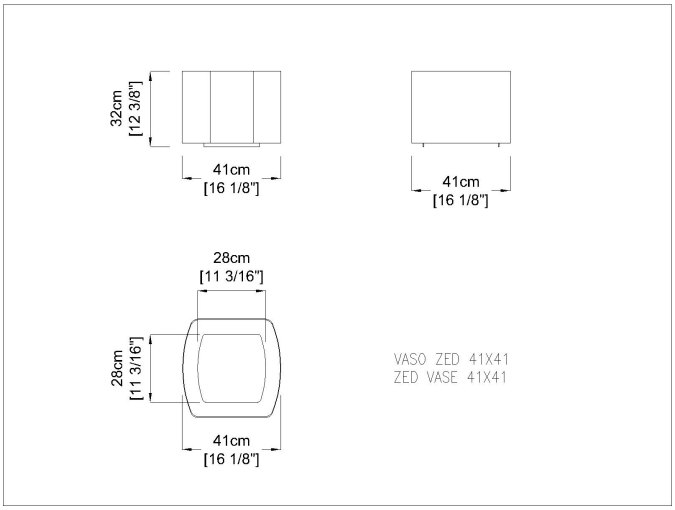


Square Pot
41 x 41

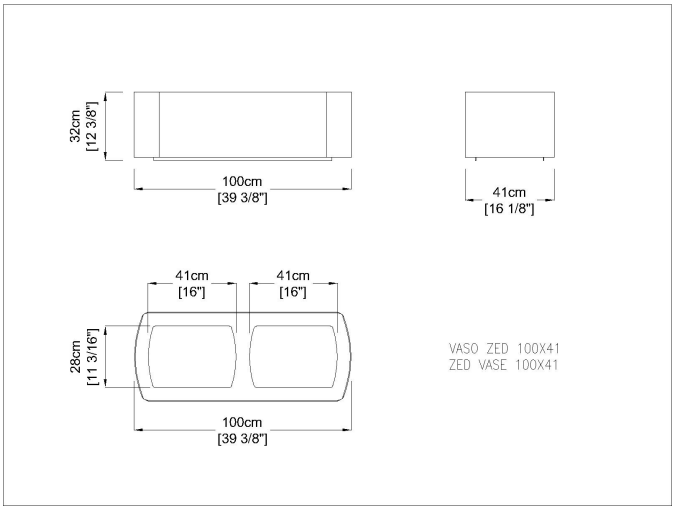


Rectangular Pot
100 x 41

Product Sheet

## Materials

### Micro-Mesh fabric

This fabric allows natural air flow and has an excellent resistance to wind, ensuring a pleasant shading at the same time. Suggested to those who want a surely eye-catching alternative fabric. Its fibre composition, taking advantage of the “Precontraint” technology, guarantees an exceptional resistance to tearing, ultraviolet light and mould. 410 gr/m2.

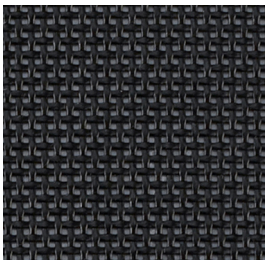
M00 Nero
5005

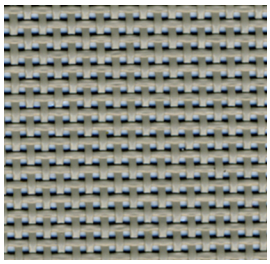
M01 Cenere
5014

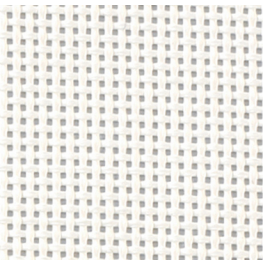
M03 Bianco
5001

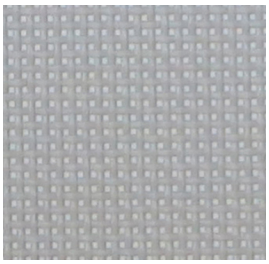
M08 Gris Platine
5374

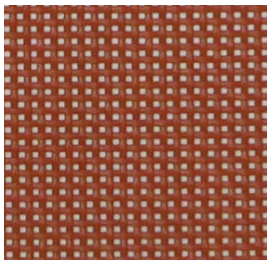
M09 Ambra
5016

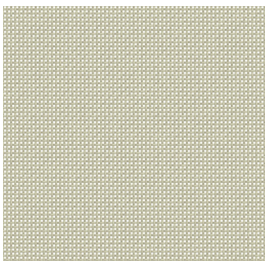
M13 Sage
50880

### Finishes

The materials used have been specifically selected and treated to maintain our products durability and consistency over time. The lumber we source is the best available to guarantee structural integrity and strength of the product. The aluminum profiles are powder coated or anodized to ensure a longer durability in time. The colors may differ from the real ones.


ANODIC

Linen

Product Sheet

## Images

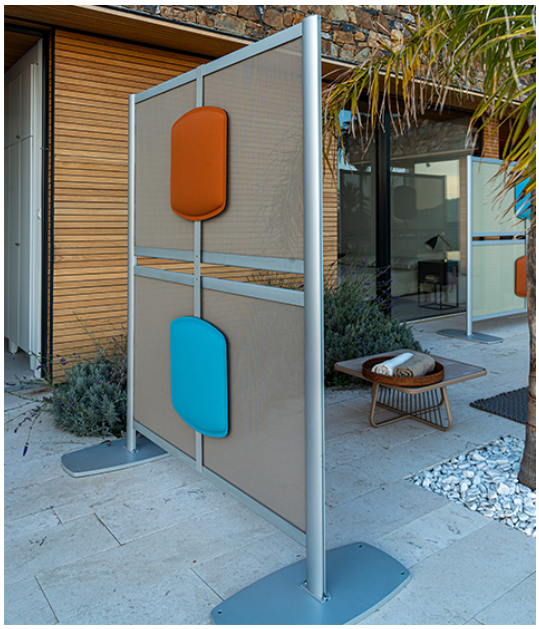

Product Sheet

## Suggested Products

Flexy
Twin

Flexy

Flexy
Zen

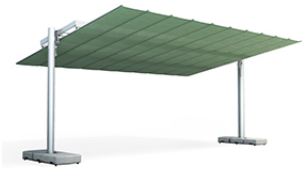

Flexy
Large